ITEM	DESCRIPTION	REQ'D	MATERIAL	ASTM	ALLOY OR TYPE
1	J1903WSN	1	BRONZE	B-62	ALLOY C83600
2	TAILPIECE	1	BRONZE	B-62	ALLOY C83600
3	COPPER TUBE NUT	1	BRONZE	B-62	ALLOY C83600

VALVE SIZE	A	B
3/4	4-5/8"	1-27/32"
1	5-5/8"	2"

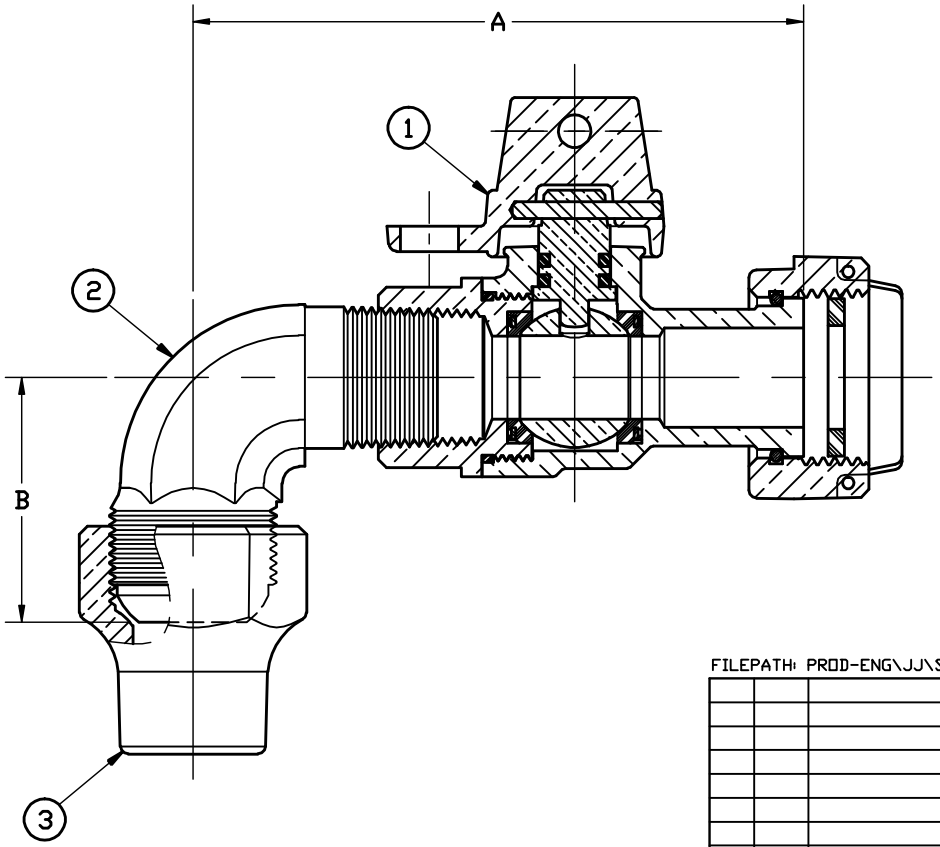

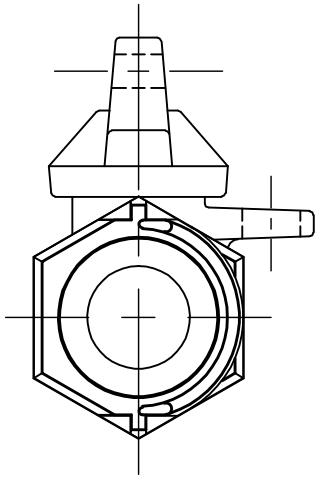

FILEPATH: PROD-ENG\JJ\SUBMITTALS\J1513CSN

REV	ECR	DESCRIPTION	DATE	BY	CHKR

PER EST NO: DXXXX EST FIN WT = 0.0000 lbs

DRFTR	jGarvin	3/5/08
CHKR		
ENGR		
MGR		
	BY	DATE
STK No:		
MAT'L:		

JAMES JONES CO.

UNLESS OTHERWISE NOTED
SURFACE PREPARATION:
BREAK CORNER(S) ---- .000
SURFACE FINISH -- 000 RMS
TOLERANCE(S):
LINEAR ---------- ± .000
ANGULAR --------- ± 0°00'

THIRD ANGLE PROJECTION

REF. No.

SCALE FULL

DESCR. 90° CS ELL x SWIVEL METER (2 PIECE) ASSEMBLY

PART NUMBER J1513CSN

PART NUMBER J1513CSN

JJ-MRKTG