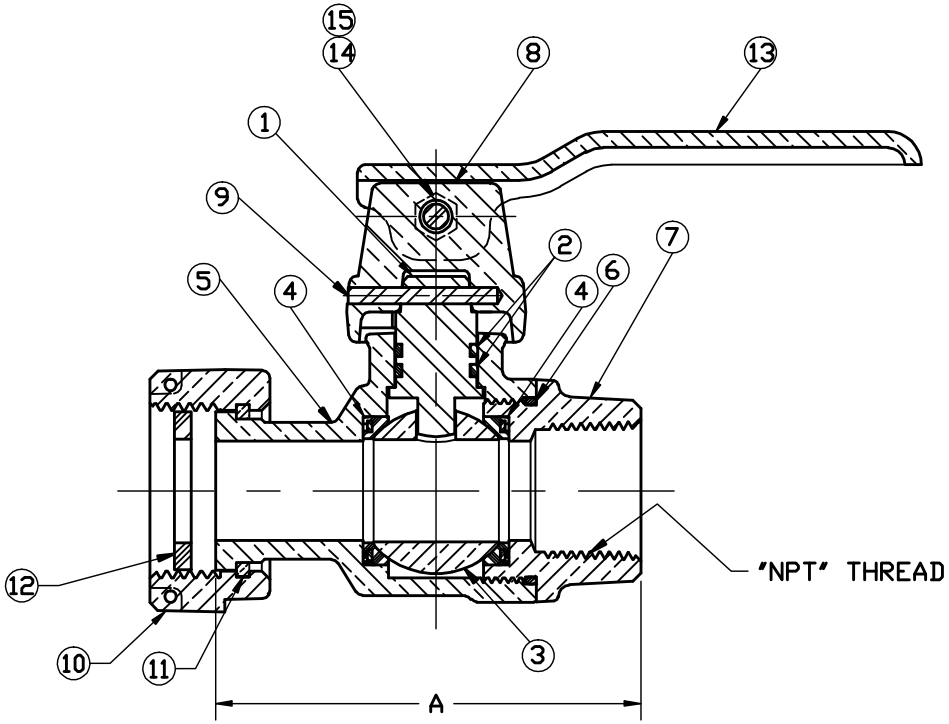

No.	DESCRIPTION	MATERIAL
1	STEM	CAST BRASS ASTM B62 ALLOY C83600
2	O-RING	EPDM D2000
3	BALL	CAST BRASS ASTM B62 ALLOY C83600
4	GASKET - SEAL	NITRILE D2000
5	BODY	CAST BRASS ASTM B62 ALLOY C83600
6	O-RING	EPDM D2000
7	END PIECE	CAST BRASS ASTM B62 ALLOY C83600
8	CAP	CAST BRASS ASTM B62 ALLOY C83600
9	SOLID PIN	AISI 303 STAINLEES STEEL
10	PLAIN NUT	CAST BRASS ASTM B62 ALLOY C83600
11	SNAP RING	PHOS BRONZE
12	RUBBER GASKET	NITRILE ASTM D2000
13	LEVER HANDLE	CAST BRASS ASTM B62 ALLOY C83600
14	MACH. SCREW	AISI 304 STAINLESS STEEL
15	HEX LOCKNUT	TYPE 18-8 STAINLESS STEEL

VALVE SIZE	A	NPT SIZE
3/4"	3-57/64"	3/4"
3/4 x 1"	3-7/16"	1"
1"	4-11/64"	1"

FILEPATH: PROD-ENG\JJ\SUBMITTALS\J1908

REV	ECR	DESCRIPTION	DATE	BY	CHKR

DRFTR	JGarvin	1/11/07
CHKR		
ENGR		
MGR		
	BY	DATE
STK No:		
MAT'L:		

JAMES JONES CO.

UNLESS OTHERWISE NOTED
SURFACE PREPARATION:
BREAK CORNER(S) ---- .000
SURFACE FINISH -- XX RMS
TOLERANCE(S):
LINEAR ---------- ± .000
ANGULAR --------- ± 0°00'

THIRD ANGLE PROJECTION

REF. No. | SCALE

DESCR. STRAIGHT CURB STOP BALL VALVE WITH LEVER HANDLE (MC x FIP)

PART NUMBER J1908

PART NUMBER J1908

JJ-MRKTG