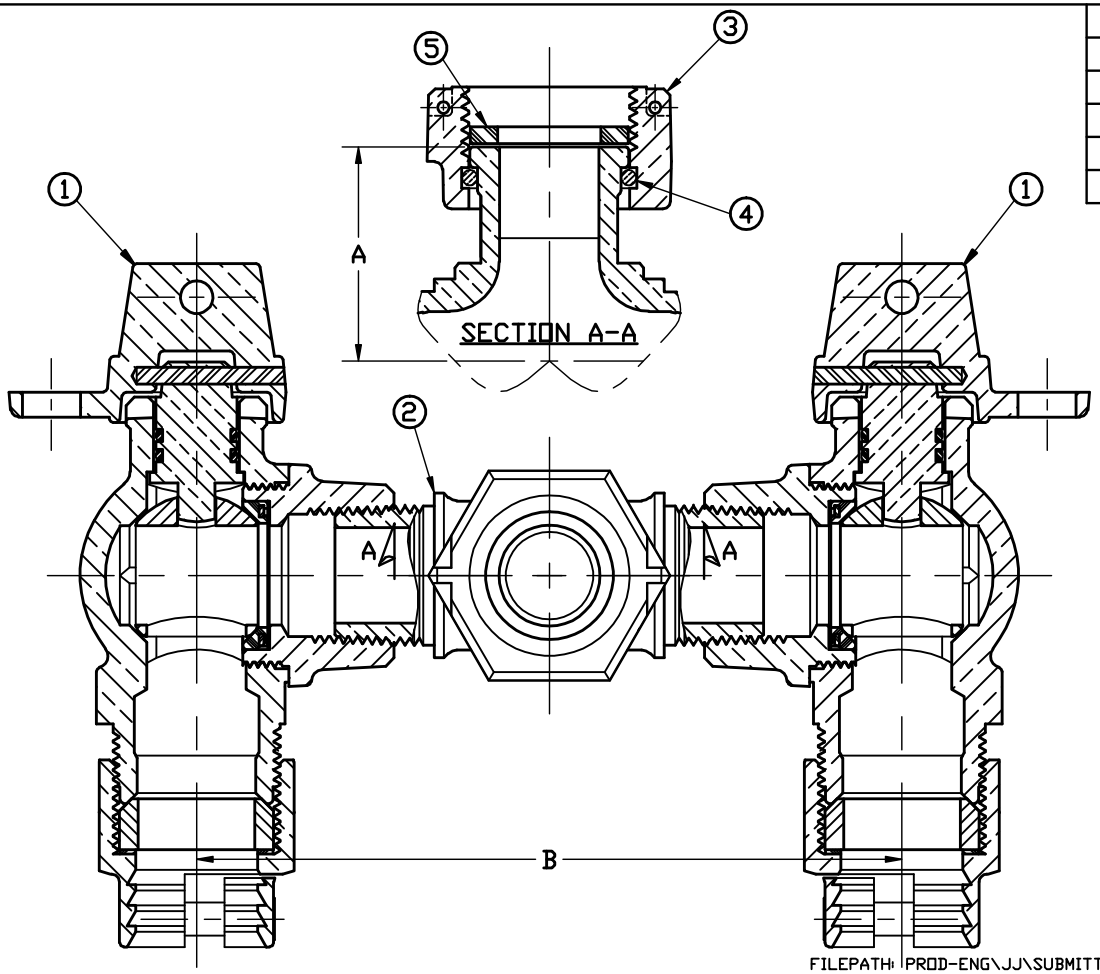

No.	DESCRIPTION	MATERIAL
1	VALVE ASS'Y	J1969W
2	TEE	CAST BRASS ASTM B62 ALLOY C83600
3	PLAIN NUT	CAST BRASS ASTM B62 ALLOY C83600
4	SNAP RING	PHOS BRONZE
5	RUBBER GASKET	NITRILE ASTM D2000

ASSY SIZE	A	B
3/4"	1.616	5.312
1"	2.060	6.344

FILEPATH: PROD-ENG\JJ\SUBMITTALS\J2218

REV	ECR	DESCRIPTION	DATE	BY	CHKR

DRFTR	RWB	6/5/07
CHKR		
ENGR		
MGR		
	BY	DATE
STK No:		
MAT'L:		

JAMES JONES CO.

UNLESS OTHERWISE NOTED
SURFACE PREPARATION:
BREAK CORNER(S) ---- .000
SURFACE FINISH -- XX RMS
TOLERANCE(S):
LINEAR ---------- ± .000
ANGULAR --------- ± 0°00'

THIRD ANGLE PROJECTION

REF. No.

SCALE FULL

DESCR. DUAL SERVICE ASSEMBLY TEE (METER SWIVEL INLET x CTS PJ OUTLETS)

PART NUMBER J2218

PART NUMBER J2218

JJ\MRKTNG