No.	DESCRIPTION	MATERIAL DESCRIPTION
1	BODY	CAST NO LEAD BRASS ALLOY
2	CAP	CAST BRASS ASTM B62 ALLOY C83600
3	STEM	CAST NO LEAD BRASS ALLOY
4	BALL	CAST NO LEAD BRASS ALLOY
5	GASKET	EPDM ASTM D2000
6	SOLID PIN	AISI 304 ANNEALED STAINLESS STEEL
7	O-RING	EPDM ASTM D2000
8	END PIECE	CAST NO LEAD BRASS ALLOY
9	O-RING	EPDM ASTM D2000

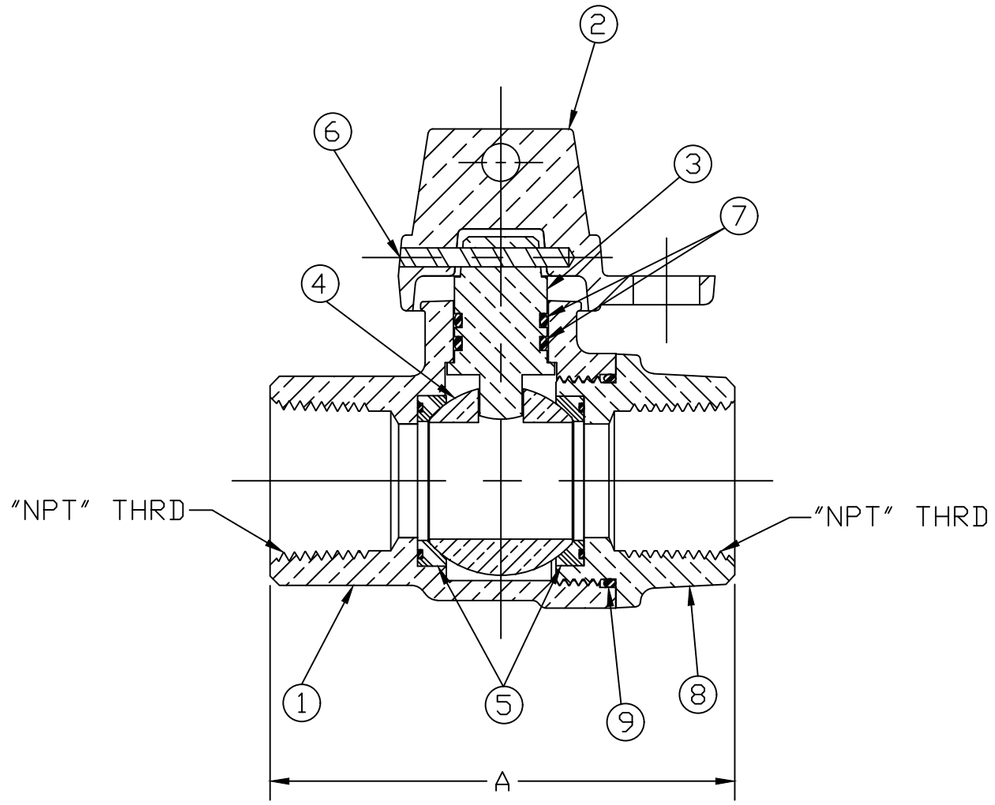

VALVE SIZE	A	NPT SIZE
3/4"	3-1/16"	3/4"
1"	3-27/32"	1"
1"x3/4"	3-9/32"	1"&3/4"
1-1/2"	4-5/16"	1-1/2"
2"	4-31/32"	2"

ALL WETTED PARTS ARE NO LEAD BRASS ALLOY

FILEPATH: PROD-ENG\JJ\SUBMITTALS\E1900W

REV	ECR	DESCRIPTION	DATE	BY	CHKR

DRFTR	RWB	6/9/08
CHKR		
ENGR		
MGR		
	BY	DATE

STK No:

MAT'L:

DESCR. NLB BALL TYPE CURB VALVE LOCKWING (FIP - BOTH ENDS)

JONES

UNLESS OTHERWISE NOTED
SURFACE PREPARATION:
BREAK CORNER(S) ---- .000
SURFACE FINISH -- XX RMS
TOLERANCE(S):
LINEAR ---------- ± .000
ANGULAR --------- ± 0°00

THIRD ANGLE PROJECTION

REF. No.

SCALE

DWG NUMBER
E1900W

DWG NUMBER
E1900W

JJ-MRKTNG

TITLE TO AND OWNERSHIP OF THIS ENGINEERING DATA REMAINS IN Mueller Co. NO USE IS TO BE MADE OF THIS DATA EXCEPT AS SPECIFICALLY AUTHORIZED BY Mueller Co. ASSENT ON THE PART OF THE RECIPIENT TO THESE CONDITIONS IS PRESUMED