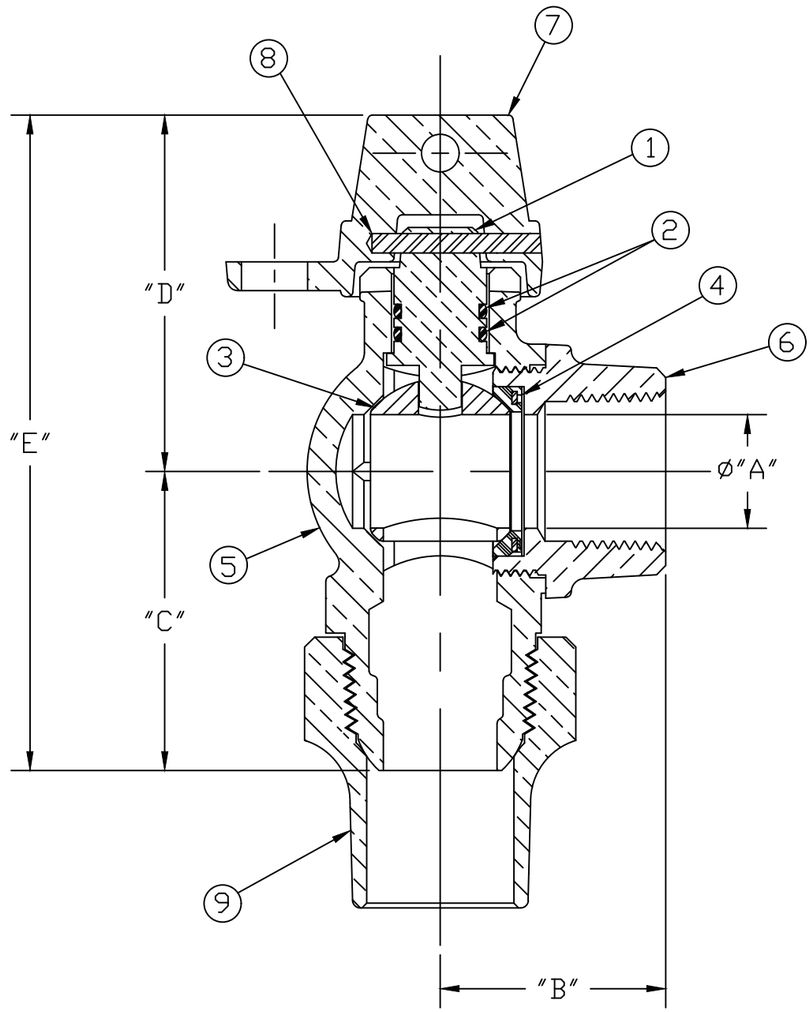

No.	DESCRIPTION	MATERIAL
1	STEM	LOW LEAD BRASS ALLOY
2	O-RING	EPDM D2000
3	BALL	LOW LEAD BRASS ALLOY
4	GASKET - SEAL	NITRILE D2000
5	BODY	CAST LOW LEAD BRASS ALLOY
6	END PIECE	CAST LOW LEAD BRASS ALLOY
7	CAP	CAST BRASS ASTM B62 ALLOY C83600
8	SOLID PIN	AISI 303 STAINLESS STEEL
9	TUBE NUT	CAST BRASS ASTM B62 ALLOY C83600

SIZE	ØA	B	C	D	E
3/4"	.750	1.488	1.974	2.352	4.326
1"	1.000	1.850	2.359	2.629	4.988

ALL WETTED PARTS ARE LOW LEAD BRASS ALLOY

FILEPATH: PROD-ENG\JJ\ASYSUBMITTALS\E1965W

REV	ECR	DESCRIPTION	DATE	BY	CHKR

PER EST NO: DXXXX EST FIN WT = 0.0000 lbs

DRFTR	RWB	10/8/13
CHKR		
ENGR		
MGR		
	BY	DATE
STK No:		
MAT'L:		
DESCR.	LLB BALL ANGLE METER VALVE (CS x FIP)	

JONES

UNLESS OTHERWISE NOTED
SURFACE PREPARATION:
BREAK CORNER(S) ---- .000
SURFACE FINISH -- XX RMS
TOLERANCE(S):
LINEAR ---------- ± .000
ANGULAR --------- ± 0°00'

THIRD ANGLE PROJECTION

REF. No.

SCALE NONE

DWG NUMBER E1965W

TITLE TO AND OWNERSHIP OF THIS ENGINEERING DATA REMAINS IN Mueller Co. NO USE IS TO BE MADE OF THIS DATA EXCEPT AS SPECIFICALLY AUTHORIZED BY Mueller Co. ASSENT ON THE PART OF THE RECIPIENT TO THESE CONDITIONS IS PRESUMED

DWG NUMBER E1965W