No.	DESCRIPTION	MATERIAL
1	SPUD	CAST NO LEAD BRASS ALLOY
2	CLPG NUT SUB	CAST BRASS ASTM B62 ALLOY C83600
3	PJ GASKET	EPDM ASTM D2000
4	WASHER	POLYPROPYLENE

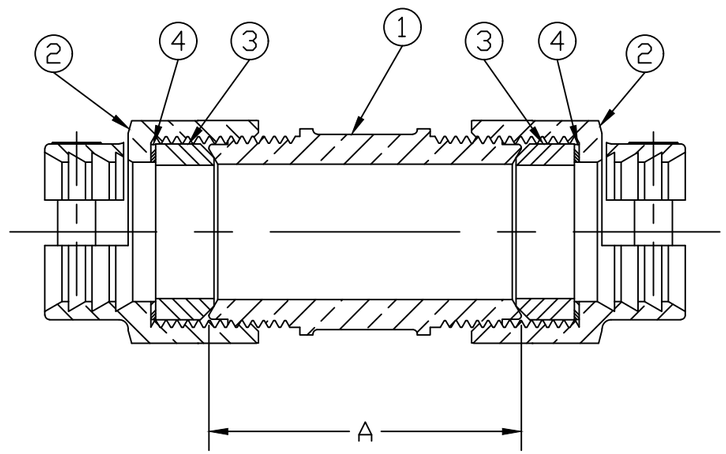

SIZE	A
3/4″	2-1/16″
1″	2-13/32″
1 × 3/4″	1-53/64″
1-1/2″	3-5/16″
2″	3-3/8″

ALL WETTED PARTS ARE NO LEAD BRASS ALLOY

FILEPATH: PROD-ENG\JAMESJONES\SUBMITTALS\E2609

REV	ECR	DESCRIPTION	DATE	BY	CHKR

DRFTR	RWB	6/9/08
CHKR		
ENGR		
MGR		
	BY	DATE
STK No:		
MAT'L:		

JONES

UNLESS OTHERWISE NOTED
SURFACE PREPARATION:
BREAK CORNER(S) ---- .000
SURFACE FINISH -- XX RMS
TOLERANCE(S):
LINEAR ---------- ± .000
ANGULAR --------- ± 0°00′

THIRD ANGLE PROJECTION

REF. No.

SCALE

DESCR.
STRAIGHT 3-PART UNION SERVICE FITTING
NLB (PJ CTS x PJ CTS)

DWG NUMBER
E2609

DWG NUMBER
E2609

JJ-MRKTG

TITLE TO AND OWNERSHIP OF THIS ENGINEERING DATA REMAINS IN Mueller Co. NO USE IS TO BE MADE OF THIS DATA EXCEPT AS SPECIFICALLY AUTHORIZED BY Mueller Co. ASSENT ON THE PART OF THE RECIPIENT TO THESE CONDITIONS IS PRESUMED