No.	DESCRIPTION	MATERIAL
1	SPUD	CAST LOW LEAD BRASS ALLOY
2	PJ GASKET	ASTM D2000 - (BUNA N)
3	WASHER	POLYPROPYLENE
4	CLPG NUT SUB	CAST BRASS ASTM B62 ALLOY C83600

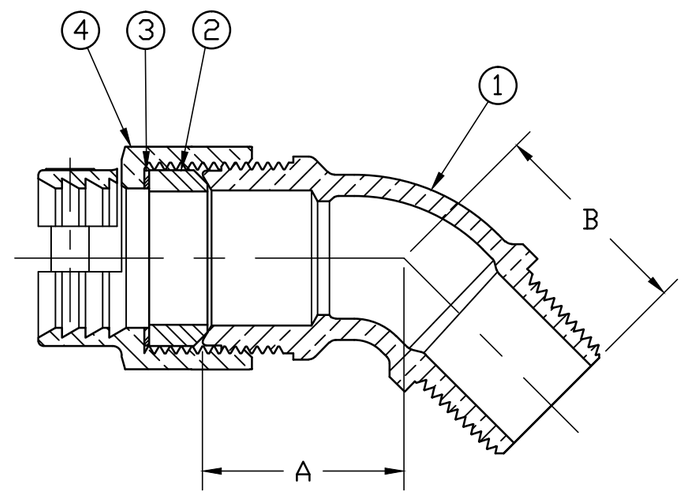

SIZE	A	B
3/4	1.33	1.38
1	1.43	1.43

ALL WETTED PARTS ARE LOW LEAD BRASS ALLOY

FILEPATH: PROD-ENG\JAMESJONES\ASYSUBMITTALS\E2635

REV	ECR	DESCRIPTION	DATE	BY	CHKR

PER EST NO: DXXXX EST FIN WT = 0.0000 lbs

DRFTR	RWB	4/26/16
CHKR		
ENGR		
MGR		
	BY	DATE
STK No:		
MAT'L:		
DESCR.	EIGHTH BEND LLB SERVICE FITTING (MIP x PJ CTS)	

JONES

UNLESS OTHERWISE NOTED
SURFACE PREPARATION:
BREAK CORNER(S) ---- .000
SURFACE FINISH -- XX RMS
TOLERANCE(S):
LINEAR ---------- ± .000
ANGULAR --------- ± 0°00'

THIRD ANGLE PROJECTION

REF. No.

SCALE NONE

DWG NUMBER E2635

DWG NUMBER E2635

JJ-MRKTNG

TITLE TO AND OWNERSHIP OF THIS ENGINEERING DATA REMAINS IN Mueller Co. NO USE IS TO BE MADE OF THIS DATA EXCEPT AS SPECIFICALLY AUTHORIZED BY Mueller Co. ASSENT ON THE PART OF THE RECIPIENT TO THESE CONDITIONS IS PRESUMED