JONES
a MUELLER brand

FIRE HYDRANT - 3 NOZZLE
DUCTILE IRON

J4060HP

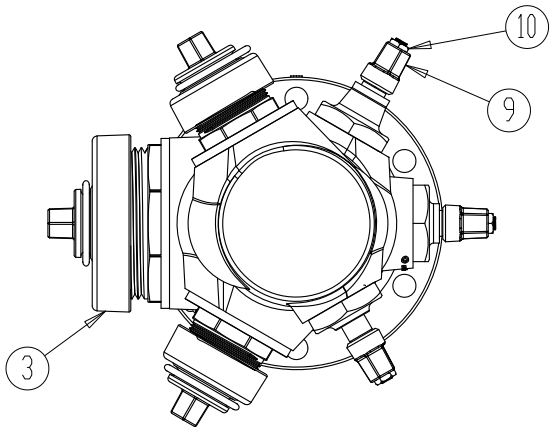

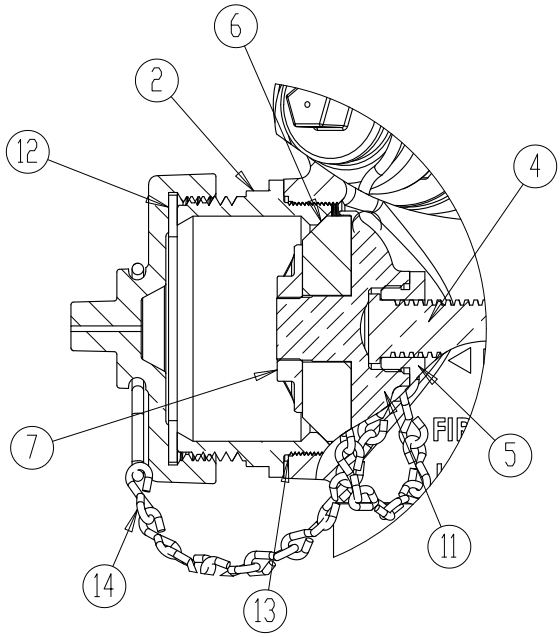

DETAIL A
SCALE 1 : 4

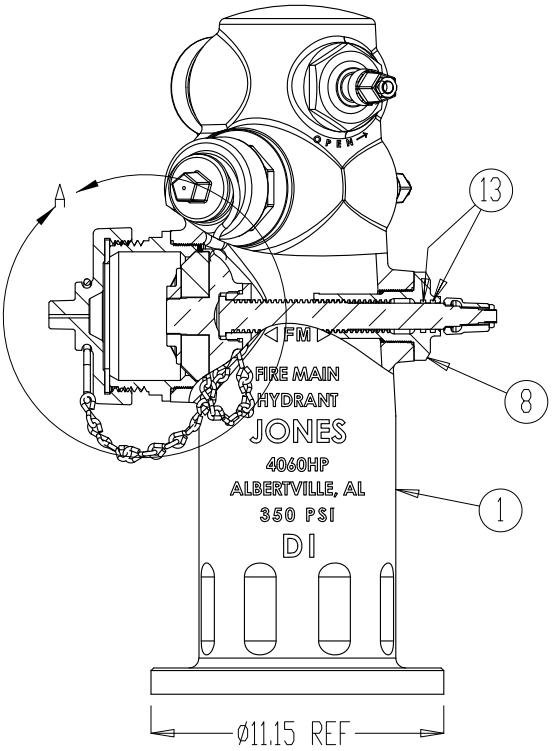

HYDRANT DESCRIPTION		
PART #	NOZZLE CONFIGURATON	FLANGE PATTERN
J4060AR	$4\frac{1}{2}$" X $2\frac{1}{2}$" X $2\frac{1}{2}$"	6 - Ø.75" HOLES, 9.38" DBC
J4060BR	4" X $2\frac{1}{2}$" X $2\frac{1}{2}$"	8 - Ø.88" HOLES, 9.5" DBC
J4060CR	4" X $2\frac{1}{2}$" X $2\frac{1}{2}$"	6 - Ø.88" HOLES, 9.5" DBC
J4060DR	4" X $2\frac{1}{2}$" X $2\frac{1}{2}$"	6 - Ø.75" HOLES, 9.38" DBC
J4060ER	$4\frac{1}{2}$" X $2\frac{1}{2}$" X $2\frac{1}{2}$"	8 - Ø.88" HOLES, 9.5" DBC

FM APPROVED 350 PSI RATING

UL 350 PSI RATING

PARTS LIST:

ID	PART NAME	MATERIAL
1	HYDRANT BODY	DUCTILE IRON ASTM A536 GR. 65-45-12
2	NOZZLE INSERTS	BRASS ASTM B584 ALLOY C89833 OR C87850
3	HOSE CAPS	CAST IRON ASTM A126 CLASS B
4	HYDRANT STEM	SILICON BRONZE ASTM B584 C87600
5	STEM LOCKNUT	BRASS ASTM B584 ALLOY C89833 OR C87850
6	BEVELED HYDRANT DISC	BUNA-N
7	HYDRANT DISC LOCKNUT	BRASS ASTM B584 ALLOY C89833 OR C87850
8	STEM INSERT	BRASS ASTM B584 ALLOY C89833 OR C87850
9	PENT NUT	BRASS ASTM B584 ALLOY C87600
10	PENT NUT RETAINER	COPPER ALLOY UNS C83600
11	HYDRANT DISC HOLDER	BRASS ASTM B584 ALLOY C89833 OR C87600
12	NOZZLE GASKET	NEOPRENE
13	O-RINGS	BUNA-N
14	CHAIN	ZINC COATED STEEL

PRODUCT FEATURES:

	FEATURE DESCRIPTION
1	MEETS OR EXCEEDS ANSI/AWWA C503
2	INDIVIDUAL STEM OPERATION
3	LIMITED NUMBER OF INTERNAL PARTS
4	NOZZLE THREADS CONFORM TO NFPA 1963, NH/NST
5	REMOVABLE NOZZLE DESIGN
6	AVAILABLE IN A VARIETY OF BOLT HOLE PATTERNS
7	LOW ZINC SILICON BRONZE STEMS
8	HEAVY DUTY DISC HOLDER
9	PRODUCT RATED UP TO 350 PSI; HYDROSTATICALLY TESTED AT 700 PSI
10	O-RING CONSTRUCTION IN STEM INSERT
11	EPOXY COATED INTERIOR MEETS AWWA C550 AND NSF 61
12	10 YEAR LIMITED WARRANTY
13	
14	

Approvals:

Date:

LAST REVISED: 08/15/23 (EO5309)

1470 SOUTH VINTAGE AVE., ONTARIO, CA 91761 * PHONE (800) 523-8618 * FAX (800) 246-5663